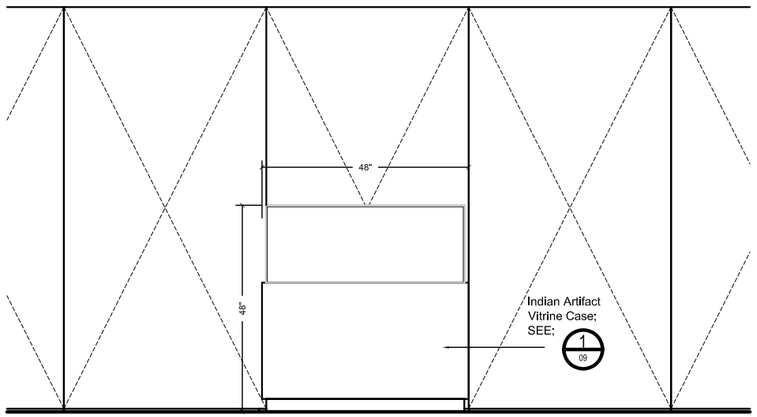


1 ELEVATION @ Indian Artifact Case
06 scale: 3/4" = 1'0"

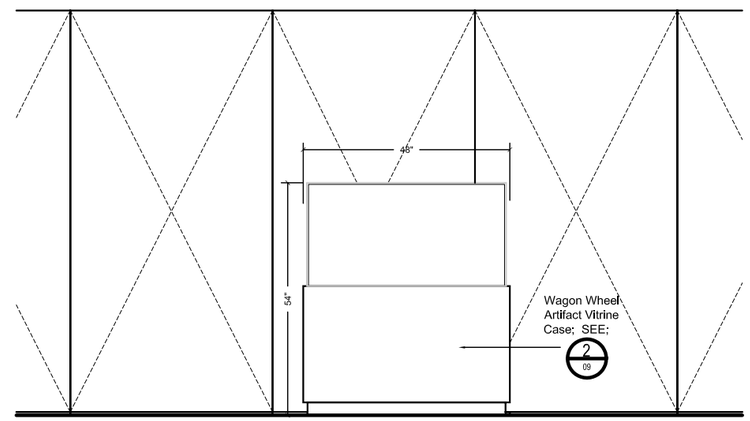


2 ELEVATION @ Wagon Model Case
06 scale: 3/4" = 1'0"

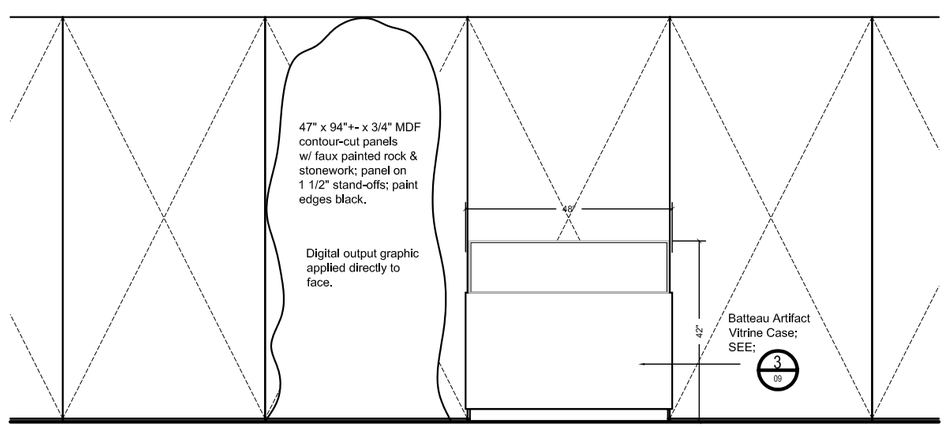


3 ELEVATION @ Batteau Model Case/Panel
06 scale: 3/4" = 1'0"

EXPLUS INC. - Dec 07, 2005
Z:\Roanoke - 4818\Updated Blue Ridge Parkway 9.23.05.dwg

EXPLUS INCORPORATED
44156 Mercure Circle, Dulles, VA 20166
Voice (703) 260-0780
Fax (703) 260-0790

General Symbols
Revision Designation
Finish Number / Letter
Revised Area

Approval Stamp

Original Stamp ORIGINAL

| No. | Date | Issues and Revisions | By | P.D. | Design | P.M. |
|---|---|---|---|---|---|---|
| | 12-3-02 | Initial Submittal | BMR | | | |
| 1 | 4.20.05 | Final In-House Revisions | wlb | | | JJM |

Project Name: BLUE RIDGE PARKWAY Visitor Center

Explus Job #: 4818

Sheet Title: Elevations

Drawing Number: EX 06